ASSEMBLING THE CUTTER

RAPIDCUT-6

GB

*—The details in this manual are simply for information
*—The manufacturer may modify this manual without being liable for the damage cause

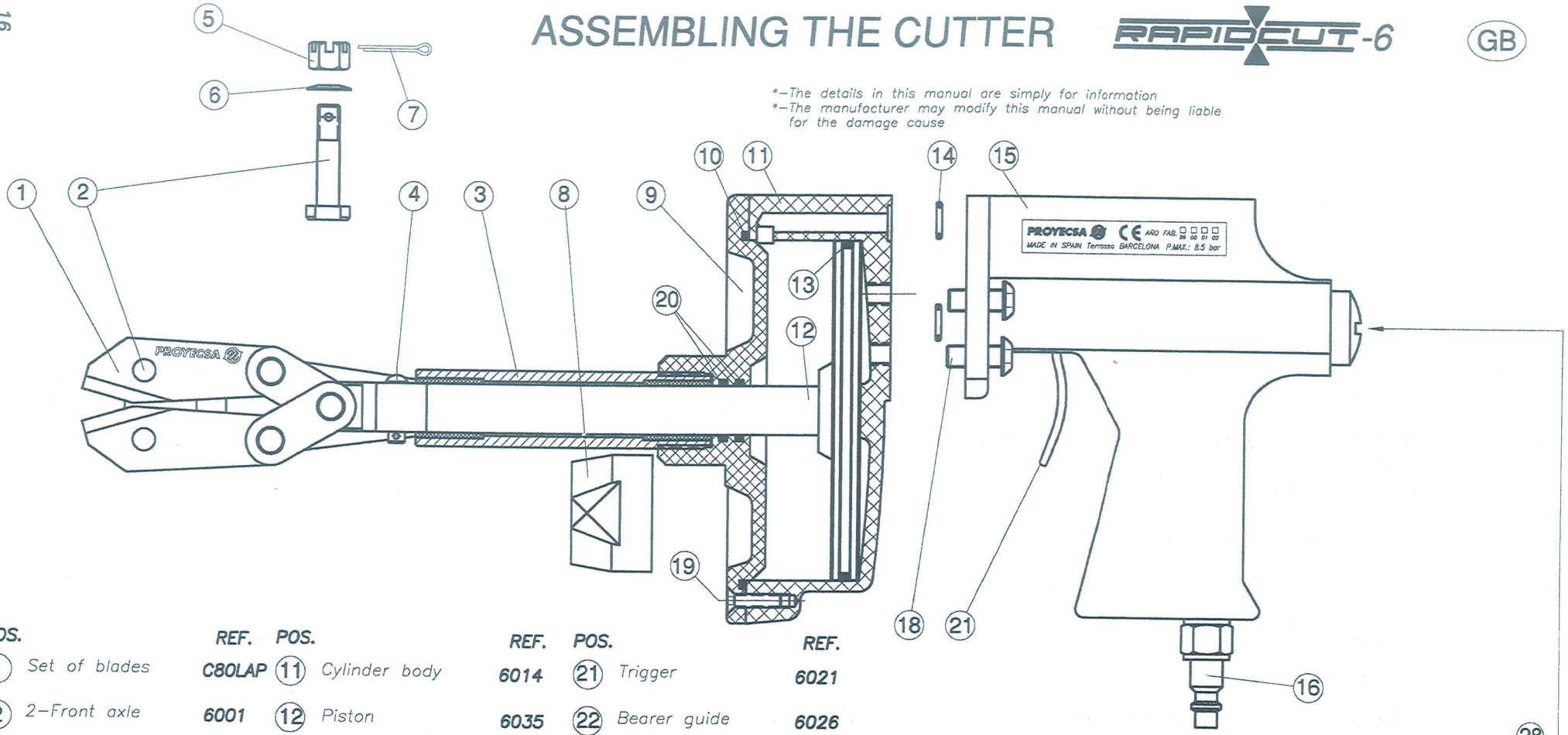

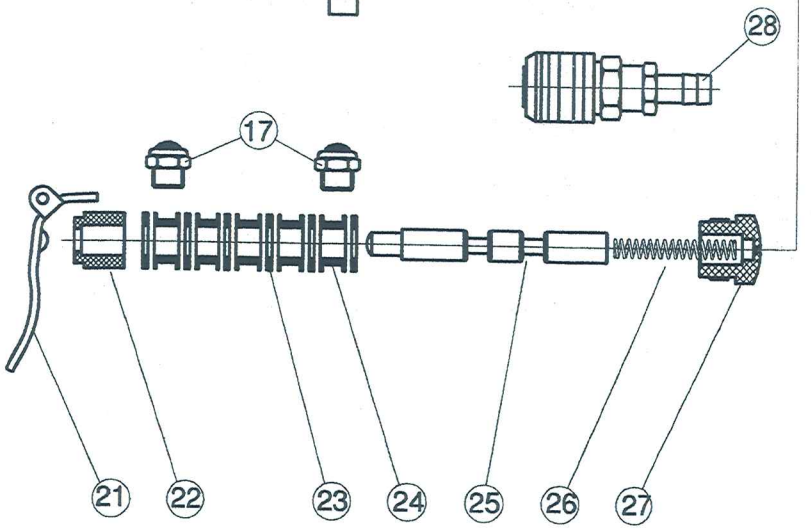

POS.		REF.	POS.		REF.	POS.		REF.
1	Set of blades	C80LAP	11	Cylinder body	6014	21	Trigger	6021
2	2—Front axle	6001	12	Piston	6035	22	Bearer guide	6026
3	Rear guide support	6009	13	Piston joint	6016	23	6—Distributor joints	6027
4	Hinge bolt	6007	14	2—Couple joints	6017	24	5—distributor spacers	6028
5	Female screw	6002	15	Distributor body	6020	25	Bearer	6025
6	Steel washer	6004	16	3/8" tube connector	6032	26	Spring	6029
7	Hinge	6003	17	2—3/8" Silencers	6031	27	Distributor lid	6030
8	Counter nut	7003	18	4—Distributor screws	6018	28	3/8" connector female	6033
9	Rear lid	6011	19	9—Lid—fastening screws	6034			
10	Lid joint	6012	20	2—Piston rod joints	6013			